REV.	DESCRIPTION OF REVISIONS	APPR.	DRAW.	RELEASE	DATE
X2					
X3					

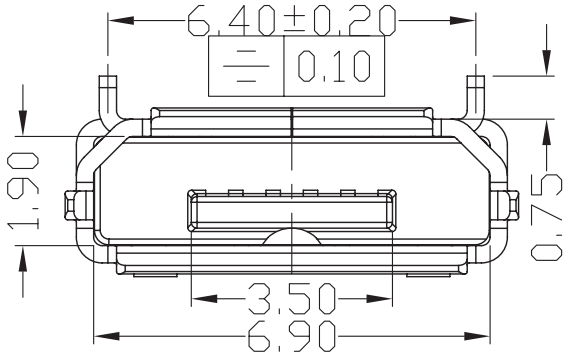

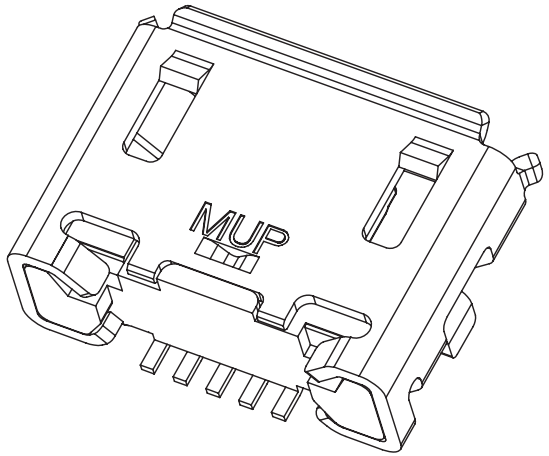

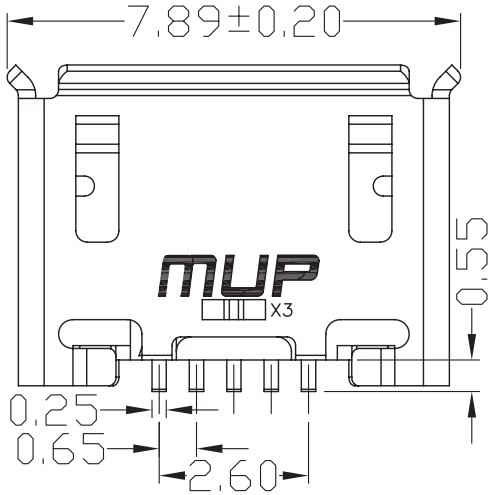

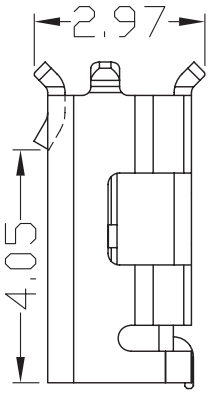

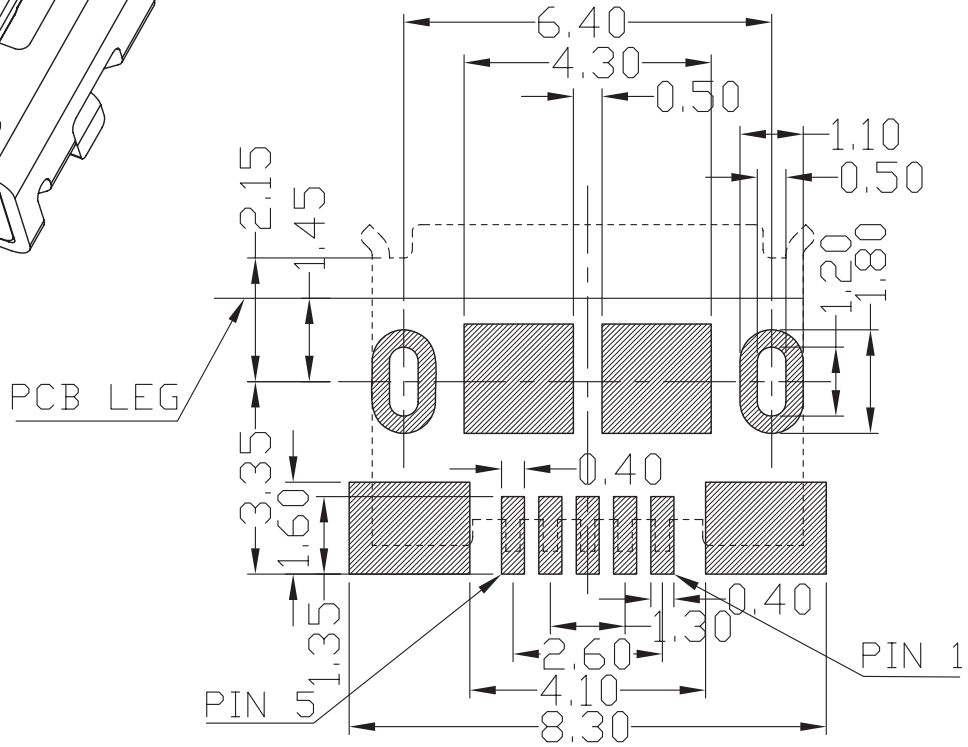

RECOMMENDED P.C.B LAYOUT
COMPONENT SIDE(TOLERANCE ±0.05)

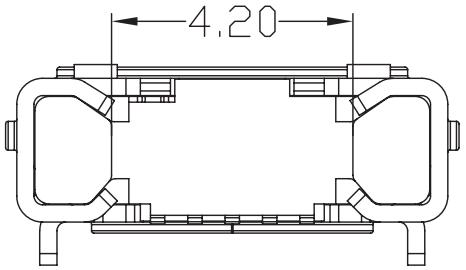

TECHNICAL CHARACTERISTICS

1.General Characteristics

Dimensions: 7.90LX5.70WX2.90H mm

Weight: Approx0.22±0.1g

Durability: 5,000 cycles min.

2.Electrical Characteristics

Contact resistance: 50mΩ max

Insulation resistance: >1000MΩ/500V DC

3.Solderability

Vaporphase: 215°C,30sec.Max

IR reflow: 250°C,5sec.Max

Manual soldering: 370°C,3sec.Max

4.Environmental Characteristics

Operating temperature: −40°C~+85°C

Operating humidity: 10%~+95%RH

ITEM	PART NAME	Q'TY	MATERIAL	FINISH
1	HOUSING	1	Hi−temp Thermoplastic	Black UL94V−0
2	SHELL	1	Stainless steel	Solderable Nickell plated over all
3	TERMINAL	5	Copper Alloy	Contact area:Gold plated

Unless otherwise specified, other tolerance are:

X	±0.35	X°	±5°
X.X	±0.25	X.X°	±4°
X.XX	±0.15	X.XX°	±3°
X.XXX	±0.10	X.XXX°	±2°

PROJ. | UNIT MM | SCALE 1:1

CUSTOMER DRAWING

RoHS PROCESS COMPLIANT

CONNECT MALL

T.1599-6885

NAME: **Micro USB Connector**

MODEL NO: **MCUD-U52105(DIPX2+SMTX2)**

TYPE : **5 PIN With Logo（W/O post）**

SHEET 1/1 | REVISION X3